Input module
Type G 8810 4401

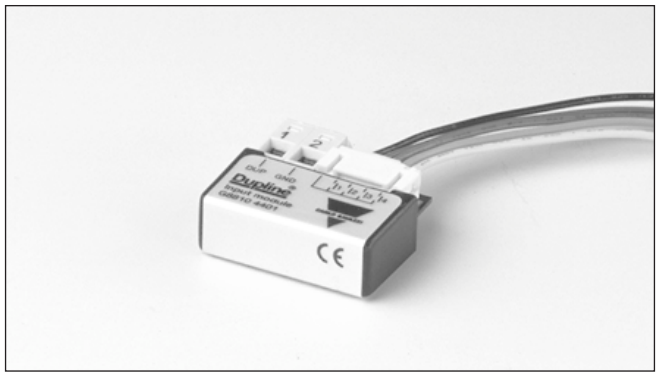

- **Small-sized 4-channel monostable transmitter**
- **4 contact inputs for pushbuttons**
- **Compact housing**
- **Dupline® supplied**
- **Address coding by GAP 1605**

Product Description

Dupline® transmitter designed to be a part of the Dupline® Building Automation concept. It allows a flexible installation concept in existing/traditional light switches. The compact size of the module makes it possible to fit it in a junction box or directly behind a switch/pushbutton input.

Ordering Key

G 8810 4401

Type: Dupline®
Housing
Transmitter
Number of Inputs
Input type

Type Selection

Supply	Ordering no.
By Dupline®	**G8810 4401**

Mode of Operation

The input addresses may be coded by means of the programming unit GAP 1605, with GAP-THP-CAB cable + pin-adaptor.

Input Specifications

Inputs	4 contacts
Input current	50 µA
Input current peak	20 mA
Input voltage drop	≤ 1 V
Cable length	≤ 0.2 m
Response time	≤ 1 pulse train

Wire Connections

Function	Terminal/Cable colour
Bus	D +
	D -
COM	Black
Input 1	Brown
Input 2	Red
Input 3	Orange
Input 4	Yellow

Supply Specifications

Power Supply	Supplied by Dupline®
Rated operational current	
Unactivated	Typ. 1 mA @ 128 channels
Activated (all inputs)	Typ. 1.4 mA @ 128 channels

Wiring Diagram

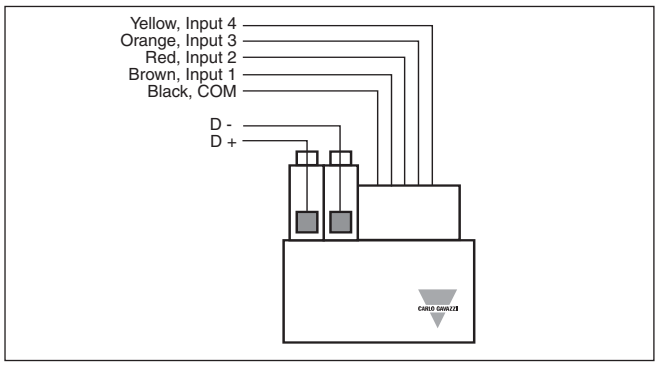

General Specifications

Environment	
Operating temperature	-10 to +70°C (+14° to +158°F)
Storage temperature	-20 to +70°C (-4° to + 158°F)
Humidity (non-condensing)	20 - 80%
Housing	
Material	Noryl GFN 1, Black
Dimensions (h x w x d)	28 x 28 x 10 mm
Max size of wire in Dupline® terminals	1.5 mm²

Accessories

Programming cable to GAP 1605	GAP-TPH-CAB