Counter
Type G4420 7401

- **4 individual counter inputs**
- **Selectable operating mode: Impulse Count or ON-time Summarizing.**
- **Reset feature**
- **32 multiplexing addresses**
- **Memory in case of power failure**
- **For DIN-rail mounting**
- **LED-indication for Operational Status**

Product Description

The Counter enables impulse counting on up to 4 channels or entry of up to 4 periods of operation with cyclic transfer on the Dupline® Bus.
The device has DIP-switches for operating mode, for reset of counter via Dupline® and for selection of measuring range with 2 to 8 decades. The Two rotary switches enable individual assignment of device address.
The counter readings can be displayed on a Touch Screen panel or by means of visualization software.
Upon voltage failure, the counter values will be stored and be available after return of the voltage.

Ordering Key

G 4420 7401

- **Type: Dupline®**
- **"H2"- Housing**
- **Transmitter**
- **32 Channels**
- **4 inputs**
- **Contact Input**

Type Selection

Supply	Ordering no.
15-30 VDC	**G 4420 7401 724**
230 VAC	**G 4420 7401 230**

Input/Output Specifications

Inputs	4
Type	S0 Contact inputs (DIN 43 864)
Rated current	10 mA @ 24 VDC / Channel
Max. length of cable	5 m
Impulse counting	
Ressolution	14 Hz
Signal (Pulse/Pause)	40 ms/40 ms
ON-time Summarizing	
Ressolution	1 ms
Accuracy	> 0.5 %

Input/Output Specifications

Power Supply	
Rated operational voltage	230 VAC ± 15% (IEC 60038) 15 - 30 VDC
Rated operational current	10 mA

General Specifications

Power ON delay	Undefined
LED-indication for	
Degree of protection	IP40
Operational status	On: OK OFF: Device disturbance or Power failure
Environment	
Operating temperature	-20 to +60°C
Humidity (non-condensing)	Max. 95% (moisture condensation not allowed)
Housing	Distribution-board housing for DIN-rail mounting acc. to DIN EN50022
Material	Polycarbonate
Dimensions	36 x 85 x 58 / 2 PD
Terminals	U-clamp terminals
Terminal capacity	Min. 0,4 mm up to max. 2,5 mm
Approvals	CE acc. To EN55022 / EN50081-1 and EN55024 / EN50082-1

Wiring Diagrams

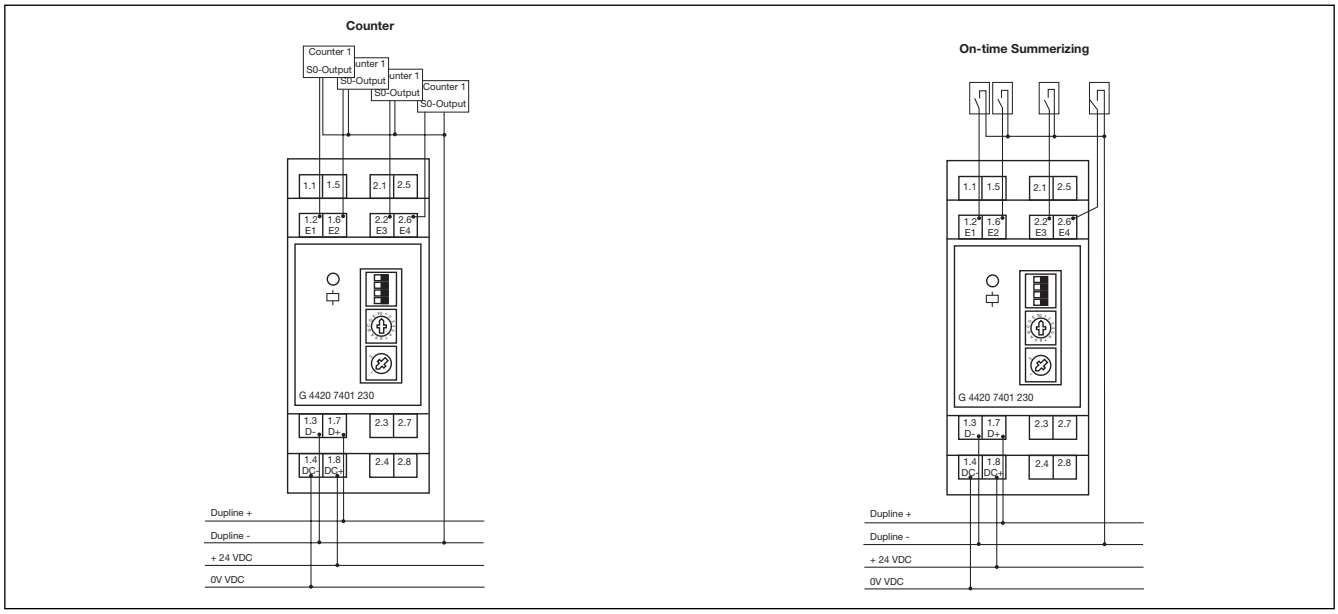

In order to avoid disturbances, the length of the cable between the counter inputs of G44207401 and the impulse output should not exceed 5 m.

Dimensions

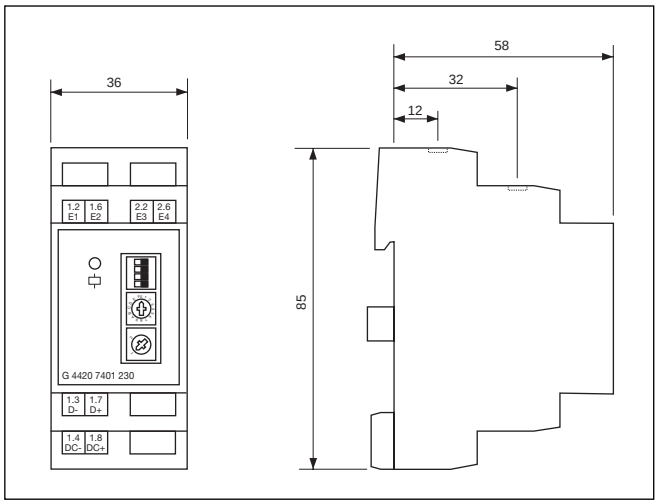

Dip-switch Settings

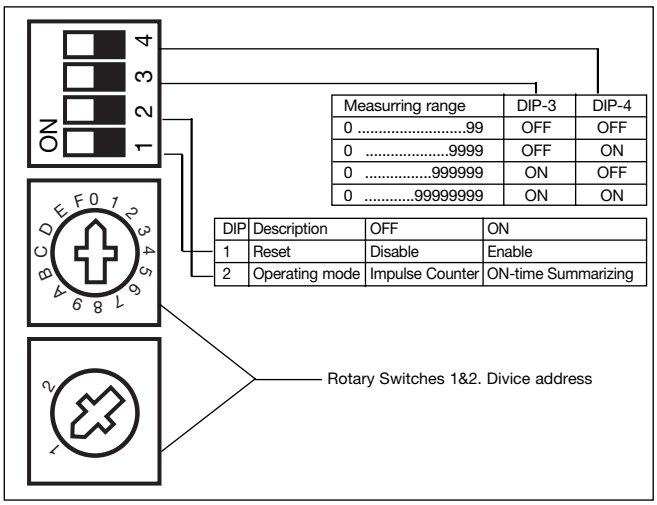

Measurring range	DIP-3	DIP-4
0 99	OFF	OFF
0 9999	OFF	ON
0 999999	ON	OFF
0 99999999	ON	ON

DIP	Description	OFF	ON
1	Reset	Disable	Enable
2	Operating mode	Impulse Counter	ON-time Summarizing

Terminal Assignment

Terminal	Function
1.2	Counter Input 1
1.4	Counter Input 2
2.2	Counter Input 3
2.6	Counter Input 4
1.3	Dup. Gnd
1.7	Dupline® Signal
1.4	0 VDC
1.8	+24 VDC
1.1	230 VAC
1.5	230 VAC

Specifications are subject to change without notice (14.03.01)
Dupline® is a registered trademark. A product of the CARLO GAVAZZI Group

Mode of Operation

G4420 7401 has 4 DIP-switches for selection of Operating mode and 2 rotary switches for selection of device address.

Selection of device address (rotary switches)
Selection of device address is performed by means of the two rotary switches at the front. In multiplex mode, up to 32 devices with 4 channels each (128 counter values) can operate on the same Dupline® network simultaneously.
The address selection is deliberately kept simple: all that is needed is to assign a unique address to the first of the four channels of G 4420 7401. The following addresses are then automatically assigned to the three other channels. If several G 4420 7401 are used, the settings must look as follows:

Device	Rotary Switch		Dupline®Channel				
Address	1	2	B2	B3	B4	B5	B6
0	1	0	0	0	0	0	0
1	1	1	0	0	0	0	1
2	1	2	0	0	0	1	0
3	1	3	0	0	0	1	1
4	1	4	0	0	1	0	0
5	1	5	0	0	1	0	1
6	1	6	0	0	1	1	0
.	.	.	.	.	.	.	.
.	.	.	.	.	.	.	.
14	1	E	0	1	1	1	0
15	1	F	0	1	1	1	1
16	2	0	1	0	0	0	0
17	2	1	1	0	0	0	1
.	.	.	.	.	.	.	.
.	.	.	.	.	.	.	.
27	2	B	1	1	0	1	1
28	2	C	1	1	1	0	0
29	2	D	1	1	1	0	1
30	2	E	1	1	1	1	0
31	2	F	1	1	1	1	1

The 4 counter inputs can be selected individually as follows:

Input	Dupline® Channel	
Counter	B7	B8
1	0	0
2	0	1
3	1	0
4	1	1

A change of address during operation has immediate effect, but does not influence the counter value. After the change, the G 4420 7401 transmits updated values to the new address.

The Dupline® multiplex operation makes it possible to transmit several counter or analog values to the same address so that the number of addresses in use remains relatively low. By means of a special addressing mechanism, it is possible to transmit up to 128 signals on channels B2 to B8.
If a device detects the address of one of its channels, it will transfer the data to the bus in the same cycle. The addresses used for counting start with C1 and – depending on the measuring range – go up to F8. The address is created as a binary value.

RESET Feature (Dip-switch 1)
The G 4420 7401 makes it possible to reset each of the four counter values induvidually via the Dupline-Bus. In order to prevent unwanted resetting, this function can be disabled for all channels via Dip-Switch 1.

Dip-switch 1 OFF: Reset Disabled
Dip-switch 1 ON: Reset Enabled

The Reset of a value takes place through address B1. If the address is set to "1" during the reading of the value, the G 4420 7401 automatically sets the counter value to "0". It is also possible to reset the respective multiplex address by setting B1 to "1" and then back to "0".

Operating Mode (DIP switch 2)
It is possible to select operating mode for all channels with DIP switch 2. Two modes can be selected:

Dip-switch 1 OFF: All channels operates as impulse Count
Dip-switch 1 ON: All channels operates as impulse Count or ON-time Summarizing

When operating as an impulse counter (position "OFF"), the G 4420 7401 counts impulses at the inputs of up to 20 Hz. When DIP switch 2 is set to "ON", G 4420 7401 counts the operating hours and sums up the time for which the contact connected to the input is enabled. Min. time is 1 ms.

Selection of measuring range DIP switches 3 & 4
DIP switches 3 & 4 make it possible to select measuring ranges with 2 to 8 digit positions in two steps. If the measuring range is exceeded, the counter rolls over and starts from zero.

Data channels
Data transmission by G 4420 7401 always starts on the first address in channel group C. The number of addresses needed depends on the selected measuring range. The value "59" lies in the range from 0 – 99 and looks as follows:
The value " 7584" lies in the range from 0 – 9999 and looks as follows:

Factor	80	40	20	10	8	4	2	1
Channel	C1	C2	C3	C4	C5	C6	C7	C8
Value	0	1	0	1	1	0	0	1

Factor	8000	4000	2000	1000	800	400	200	100	80	40	20	10	8	4	2	1
Channel	C1	C2	C3	C4	C5	C6	C7	C8	D1	D2	D3	D4	D5	D6	D7	D8
Value	0	1	1	1	0	1	0	1	1	0	0	0	0	1	0	0

Dimensions (mm)

D-housing

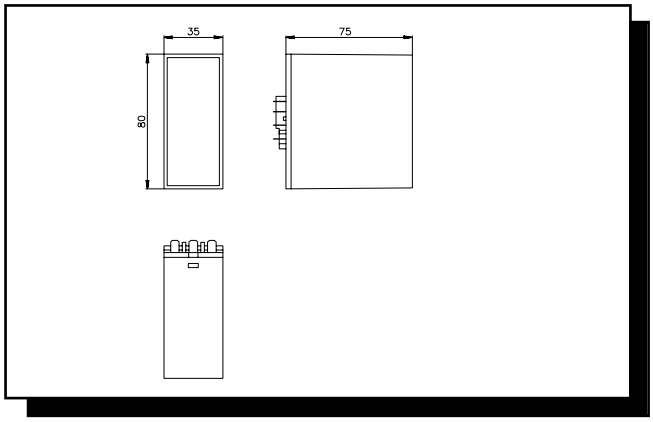

H1/H2-housing

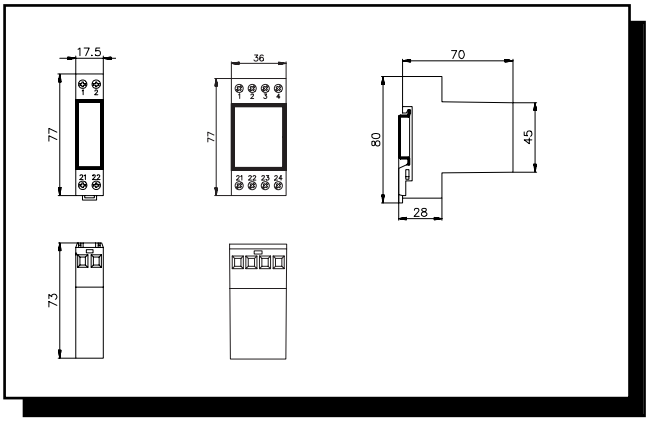

H4-housing

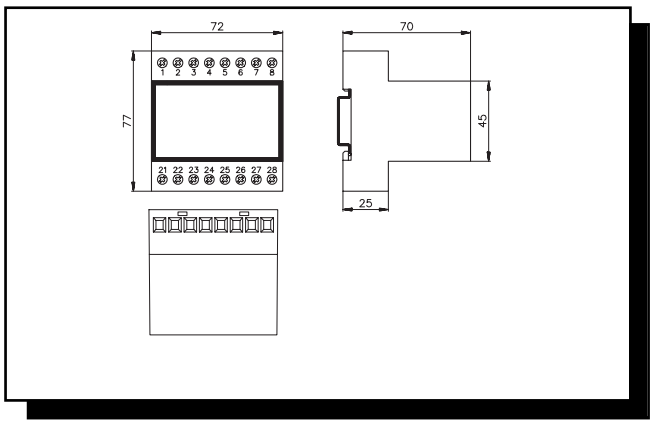

H8-housing

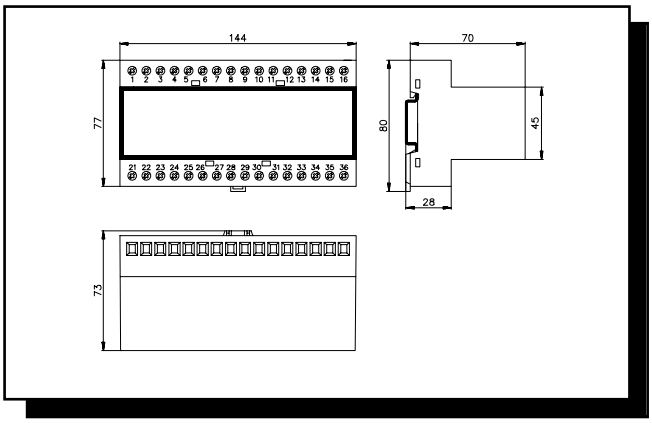

96 x 48-housing

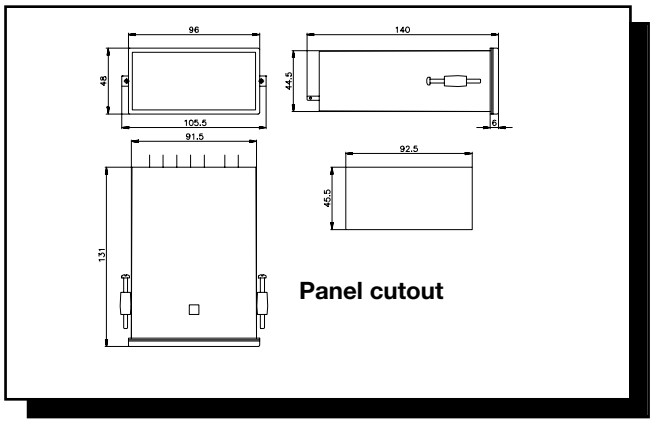

144 x 48-housing

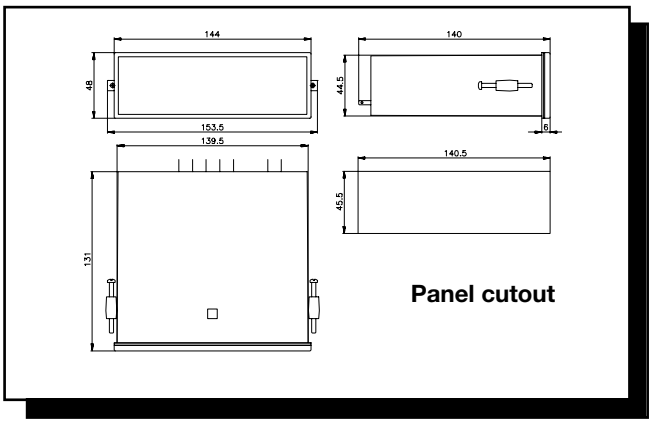

Mini-E Housing

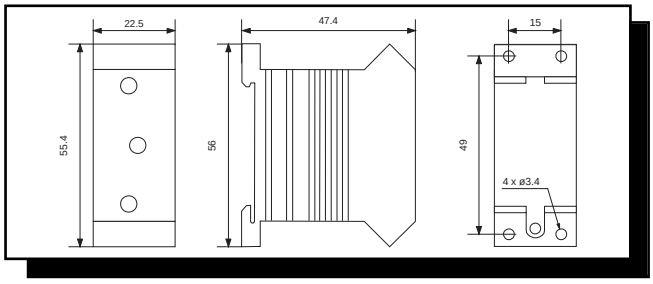

Specifications are subject to change without notice (28.09.99)
Dupline® is a registered trademark. A product of the CARLO GAVAZZI Group