Dupline® Field- and Installationbus Transmitter with Built-in Temperature Sensor Type G 8911 1010

CARLO GAVAZZI

- **AnaLink temperature transmitter with built-in Pt 1000 sensor**
- **Temperature range: -30°C to +60°C (-22 to +140°F)**
- **Uses only 1 channel**
- **Channel coding by GAP 1605**
- **M12 connection**
- **Easily mountable**
- **Supplied by Dupline**

Product Description

The sensor is mounted right at the location where the temperature is to be measured, e.g. freezer cabinets in super markets, cold storage rooms etc. The sensor measures the temperature and transmits the value to the controller G 3890 0030, which then performs the logging and alarming.

Ordering Key

G 8911 1010

Type: Dupline
Type

Type Selection

Supply	Ordering no. 1 channel Pt 1000 sensor
By Dupline	**G 8911 1010**

Supply Specifications

Power supply	Supplied by Dupline
Rated operational current	typ. 800 µA

General Specifications

Channel programming		By GAP 1605
Channel assignment		1 channel, freely programmable
Environment		
Degree of protection		IP 67
Operating temperature		-30 to 60°C (-22 to +140°F)
Storage temperature		-55 to +85°C (-67 to +185°F)
Mechanical resistance		
Shock		15 G (11 ms)
Vibration		2 G (6 to 55 Hz)
Connection		M12 plug
Housing		Flat-pack
Material	Housing	Polycarbonate
	Plug	Nylon
Colour		Light grey
Dimensions (l x w x d)		67 x 35 x 15 mm
Mounting		Direct wall mounting*)

*) To measure the air temperature, the sensor should not be wall-mounted, but should be exposed to air flow.

Sensor Specifications

Sensor	Pt 1000 (built-in)	Time constant	Typ. 450 s (air flow = 0 m/s)
Temperature measuring range	-30 to +60°C (-22 to +140°F)		Typ. 350 s (air flow = 1 m/s)
Temperature probe	Pt 1000 (built-in)		
Accuracy	See curve below	Resolution	8 bits (approx. 0.35 K/LSB)

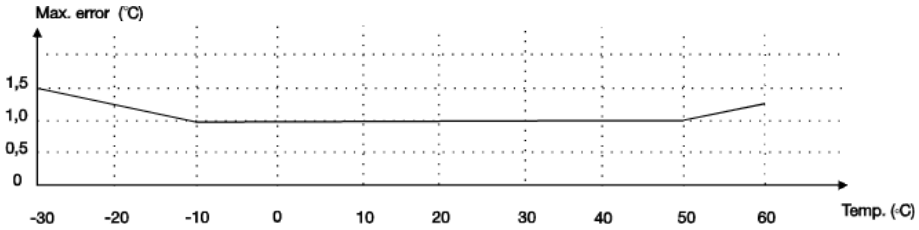

CARLO GAVAZZI

Distance versus No. of Sensors

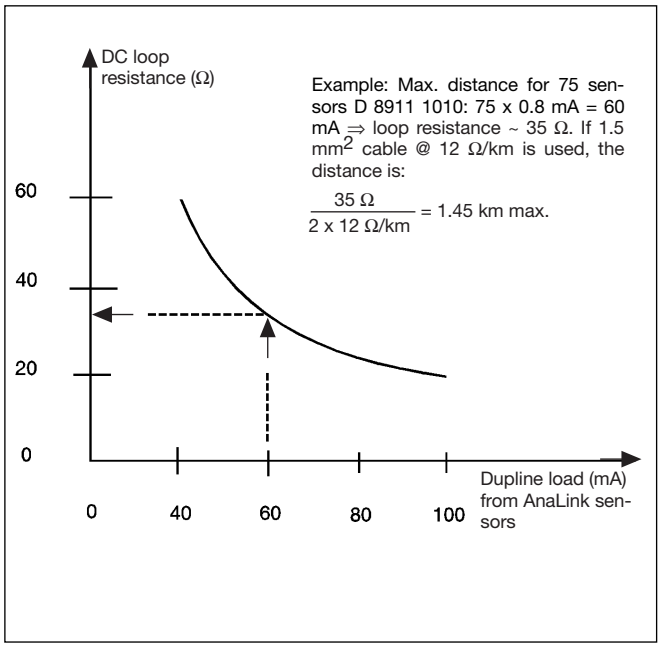

Dimensions

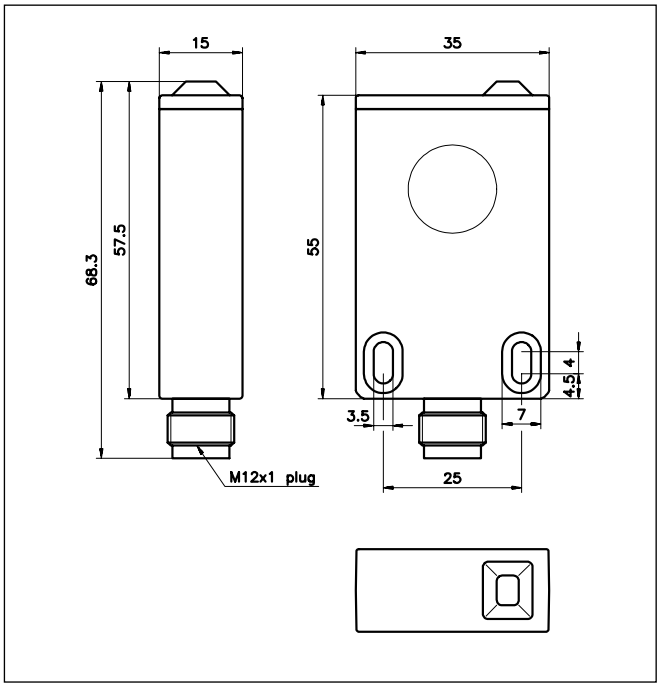

Connections

M12 plug with terminals	Pin 1: Dupline	
	Pin 4: GND	
Standard cable with M12 plug (IEC 947-5-2) with 4 wires:	Brown:	Dupline (1)
	Black:	GND (4)
	Blue:	GND (3)
	White:	GND (2)
with 3 wires (1-3-4):	Brown:	Dupline (1)
	Black:	GND (4)
	Blue:	GND (3)
with 2 wires (1-4)	Brown:	Dupline (1)
	Blue:	GND

Note: All wires **must** be connected.

Accessories

Coding cable	GTS-CAB*
Angular M12 plug	CONH 1A-A
Straight M12 plug	CONH 1A-S
Cable with angular plug	CONH 10-A.**
Cable with straight plug	CONH 10-S.**

* Delivered with the G 3890 0030.
** Indicate length 2 m or 5 m.

Specifications are subject to change without notice