Display for Digital Signals
Type G5460 6606

- **16 channel status LED indicator**
- **Label slide for LED descriptions**
- **Individual address coding of LED's**
- **Normal or inverted LED operation per 8 channel group**
- **AC/DC power supply**
- **NPN transistor output for loss of Dupline carrier**
- **Horizontal panel mounting, 96 x 96 mm**
- **Channel coding by GAP 1605**

Product Description

Dupline display for panel mounting. Status indication of 16 channels in 16 segment single point LED representation.
Display function normal or inverted for fast locating of deviations from normal operation, e.g. missing start-up conditions, open doors and windows, machine fault announciation etc.
Replaces all old channel display types (FK3C and FK4C).

Ordering Key

G 5460 6606 230

Type: Dupline®
Type no.
Supply

Type Selection

Supply	Ordering no. 16 channels, 16-dot LED
24 VAC	**G5460 6606 024**
115 VAC	**G5460 6606 115**
230 VAC	**G5460 6606 230**
12 VDC	*

* All AC-types may be supplied with 12 VDC through pins 2 & 3.
AC supply through pins 21 & 22.

Display/Output Specifications

Display	
Display format	Channel status
Display type	LED
Size of LEDs	Ø5
Display colour	Red
Display test	None, but display test can be performed by setting internal switches to normal, programming fail polarity to "I" with GAP 1605, and then unplug the Dupline connection.
Fault output (pin 4)	
Voltage range V_{BB}	4 to 35 VDC (or V_{DDin})
Reverse-polarity protection	Yes
Current	≤ 100 mA
Short-circuit protection	None
Built-in protective diodes	None
Off-state leakage current	≤ 100 µA
Voltage drop	≤ 1.5 V
Cable length	≤ 3 m
Dielectric voltage	
Output – Dupline	None

Display/Output Specifications (cont.)

DC in, output & Dupline connections	4 pole, 5 mm, plugable
Response time	< 2 pulse trains

Supply Specifications

Power supply		Overvoltage cat. III (IEC 60664)
Connection		2 pole, 10 mm, plugable
Operational voltage, through pins 21/22	230	230 VAC ±15% (IEC 60038)
	115	115 VAC ±15% (IEC 60038)
	024	24 VAC ±15% (IEC 60038)
Frequency		45 to 65 Hz
Voltage interruption		≤ 40 ms
Rated operational power		Typ. 4 VA
Rated impulse withstand voltage		
230 V		4 kV
115 V		2,5 kV
024 V		800 V
Dielectric voltage		
Supply – Dupline		≥ 4 kVAC (rms)
Supply – Output		≥ 4 kVAC (rms)
Alternative DC supply		Overvoltage cat. III (IEC 60664)
Operational voltage (V_{DDin}), through pins 2/3		12 VDC ±10% (ripple incl.)
Reverse polarity protection		Yes
Rated operational current		40 mA
Inrush current		≤ 1 A

Supply Specifications (cont.)

Rated impulse withstand voltage	800 V
Dielectric voltage	
Supply – Dupline	None
Supply – Output	None
Supply connection	2 pole, 10 mm, plugable
Power dissipation	2 W

General Specifications

Channel coding	By GAP 1605 and special cable: GAP-TPH-CAB.
Output OFF delay	
Upon loss of Dupline carrier	≤ 20 mS
Power ON delay	Typical ≤ 2 s
Indication	
Supply ON	LED green
Dupline carrier	LED yellow
Outputs	LED red Ø5
Environment	
Degree of protection	IP 40
Pollution degree	3 (IEC 60664)
Operating temperature	0 to +50°C (+32 to +122°F)
Storage temperature	-20 to +60°C (-4 to +140°F)
Humidity (non condensing)	20 to 80 %
Mechanical resistance	
Shock	15 G (11mS)
Vibration	2 G (6 to 55 Hz)
Dimensions	
Housing	96 x 96 x 78 mm
Build-in depth	70 mm + wiring
Material	NYROL SE1 GFN2
Weight	300 g

Mode of Operation

16 channel status indicator with LED display.
The display is used to monitor 2 Dupline channel groups or 16 individual channels.
The output LEDs turn on when the respective channels of the selected channel groups are activated by transmitters. Each LED represents the status of one channel. The left highest figure on the front plate indicates the lowest output of the first channel group and the right lowest figure indicates the highest output of the last channel group selected.
In case of Dupline carrier loss the line LED turn off, and the fault output turns on.

Notes

• If DC-supplied displays are used, the length of the supply bus must not exceed 3 m in order to avoid disturbances from unbalancing of the Dupline.

• To change the display operation from Normal to Inverted, remove the front plate and select the required operation at the selector switch.

• By downloading label template from the Dupline home page (www.dupline.com) it is possible to generate labels for the slides.

NB! In printer options, uncheck: Allow A4/letter paper resizing.

Accessories

Programming cable	GAP-TPH-CAB

Wiring Diagram

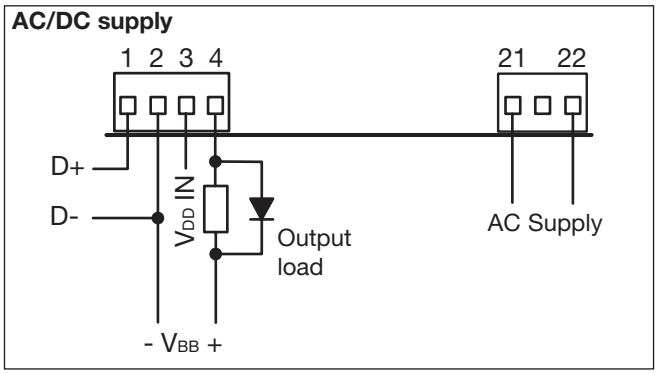

Panel Cut-out

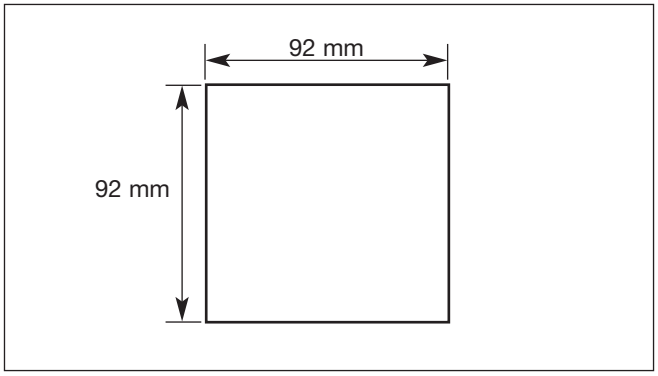

Specifications are subject to change without notice (01.02.2007)
Dupline® is a registered trademark. A product of the CARLO GAVAZZI Group