Decentral Receiver for Digital Signals
Type G 8830 1143

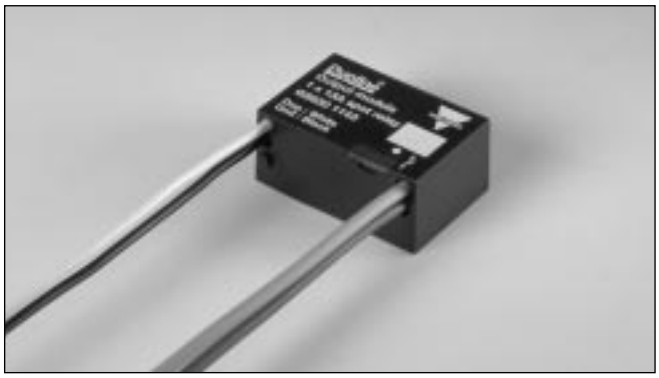

- 1-channel receiver in compact enclosure
- 1-relay output
- Load: 13 A/250 VAC
- Supplied by Dupline®
- Channel coding by GAP 1605

Product Description

The Dupline® decentral receiver has a build-in SPST relay for control of a load of up to 13 A/250 VAC. The module is especially designed for the use in building automation applications where it allows a flexible installation concept featuring a separate power and signal (control) bus. The compact size of the module makes it possible to fit it in a junction box or directly behind a power outlet.

Ordering Key

G 8830 1143

Type: Dupline®
Housing
Receiver
No. of channels
Output type

Type Selection

Ordering no. 1 channel 13 A/250 VAC
G 8830 1143

Output Specifications

Output	1 SPST relay
Contact ratings ($AgSnO_2$)	µ (micro gap)
Resistive load AC 1	13 A/250 VAC
Minimum load (recommended)	100 mA/12 V
Lifetime	see table to the right
Operating frequency	≤ 60 operations/minute
Response time	1 pulse train

Relay data

Load	Test conditions	Typical number of operations
250 V, 12 A, cos φ =1	1800/h, 50% DC, +70°C	1.0×10^5
250 V, 8 A, cos φ =1	1800/h, 50% DC, +70°C	3.5×10^5
250 V, 4 A, cos φ =1	1800/h, 50% DC, +70°C	5.0×10^5
250 V, 3 A, cos φ =1	1800/h, 50% DC, +70°C	7.5×10^5
230 V, 550 W filament lamps $I_{in} \leq 40\ A_{peak}$ $I_{off} = 2.5$ A	60/h, 8% DC, +22°C	2.0×10^5
230 V, 1000 W filament lamps $I_{in} \leq 71.5\ A_{peak}$ $I_{off} = 4.5$ A	60/h, 8% DC, +25°C	7.0×10^4
230 V, 900 W fluorescent tubes (25 x 36 W) parallel compensated, 30 µF	360/h, 50% DC, +25°C	1.0×10^4
230 V, compressor $I_{in} \leq 21\ A_{peak}$ $I_{off} = 3.5$ A cos φ = 0.5	500/h, 20% DC, +25°C	1.7×10^5
250 V, 8 A, cos φ = 0.3	360/h, 50% DC, +25°C	1.0×10^5

Supply Specifications

Supplied by Dupline®	
Normal consumption	≤ 1,1 mA
Charge consumption	≤ 3,1 mA (for max 1 s after relay state change)
Power-on delay	Typ. 2 s
Power-off delay	≤ 1 s

Insulation Voltage

Live parts - Dupline®	4 kVAC rms (6 mm)
Enclosure - Live parts	2 kVAC rms (3 mm)
Enclosure - Dupline®	2 kVAC rms (3 mm)

General Specifications

Environment	
Pollution degree	3 (IEC 60664)
Operation temperature	-20° to +50°C (-4° to 122°F)
Storage temperature	-50° to +85°C (-58° to 185°F)
Humidity (non-condensing)	20 to 80%
Housing	
Material	Noryl GFN 1, black
Dimensions (h x w x d)	26 x 39 x 17 mm

Mode of Operation

The output address and fail-polarity may be coded by means of the code programmer GAP 1605, with GAP-THP-CAB cable.

Upon loss of Dupline® carrier the output goes to the predefined fail-polarity.

Wiring Diagrams

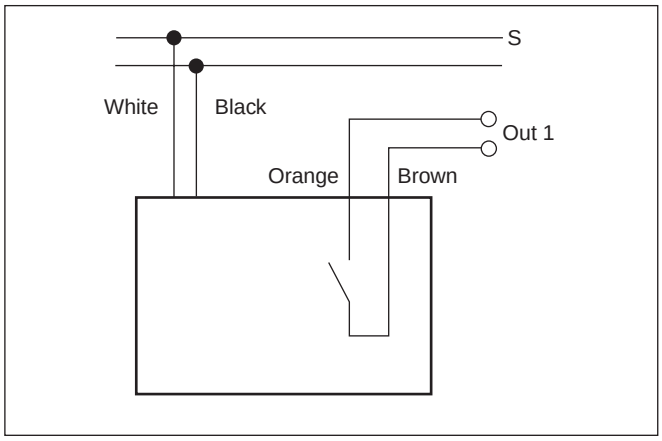

Wire Connections

Bus:	White = Dupline® signal Black = Dupline® GND
Output:	Brown = Relay contact-set Orange = Relay contact-set
Bus wires:	2 x 0,75 mm², 250 V isolation, single core, 150 mm
Output wires:	2 x 1,5 mm², 250 V isolation, single core, 150 mm

Dimensions

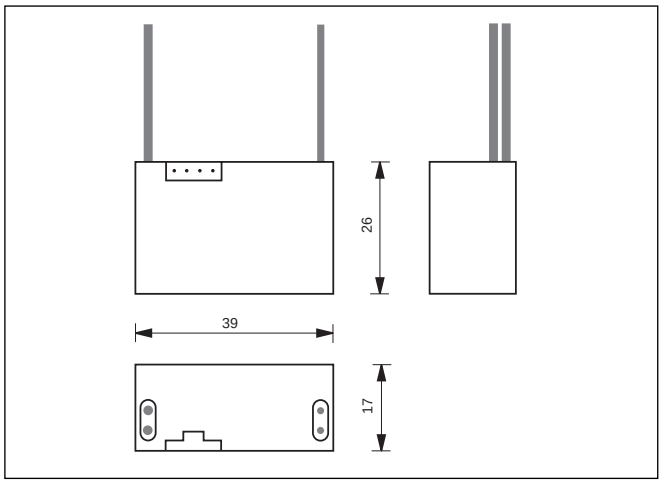

Specifications are subject to change without notice (23.02.00)
Dupline® is a registered trademark. A product of the CARLO GAVAZZI Group