ENY **ENY with Nipple**
(For Vertical or Horizontal Conduit)

EY **EY with Nipple**
(For Vertical Conduit)

ENY-2
(Fixture Hanger)
(See Page L146)

EYS **EYS with Nipple**
(For Vertical or Horizontal Conduit)

EYD **EYD with Nipple**
(Drain/Seal for Vertical Conduit)

Class I, Div. 1 & 2, Groups A,B,C,D
Class I, Zone 1, Groups IIC, IIB, IIA
Class II, Div. 1 & 2, Groups E,F,G
Class III

FEATURES-SPECIFICATIONS

Application & Installation

Class I, Divisions 1 and 2

The purpose of seals in a Class I hazardous location is to minimize the passage of gases and vapors and prevent the passage of flames from one electrical installation to another through the conduit system. Seals are required to be installed within 18 inches on any conduit run entering an enclosure which contains devices that may produce arcs, sparks, or high temperature. Where two enclosures are connected by a run of conduit not over 3 ft. long, a single seal located at the center of the run is considered satisfactory. Only explosionproof unions, couplings, elbows, and conduit bodies similar to “L”, “T”, and “X” type shall be permitted between the sealing fitting and the enclosure.

Seals shall be located within 18 inches of the enclosure or fitting on each conduit run of 2 inch size or larger entering an enclosure or fitting that contains terminals, splices, or taps.

Each run of conduit from a hazardous location to a nonhazardous location should be sealed to minimize the amount of gases and vapors communicated beyond the seal.

Class II, Divisions 1 and 2

Where a raceway provides communication between an enclosure which is required to be dust-ignitionproof and one which is not, suitable means shall be provided to prevent the entrance of dust into the dust-ignitionproof enclosure through the raceway.

Considerations for selection seals:

Select the proper sealing fitting for the hazardous gas/vapor involved; i.e., Class I Groups A, B, C, or D. Zone 1, Groups IIC, IIB, IIC

Select a sealing fitting for the proper use in respect to mounting position. This is particularly critical when the conduit runs between hazardous and nonhazardous areas. Some seals are designed to be mounted in any position; others are restricted to vertical mounting.

Drains

Where there is a probability that liquid or other condensed vapor may be trapped within enclosures for control equipment or at any point in the raceway system, approved means — such as installation of drain seals — shall be provided to prevent moisture accumulation.

For more complete data or special applications, consult the code or your local inspector.

Sealing compounds shall be approved for the purpose and shall not be affected by the surrounding atmosphere or liquids, and shall not have a melting point of less than 93°C. (200°F.).

In the complete seal, the minimum thickness of the sealing compound shall not be less than the trade size of the conduit, and in no case less than 5/8 inch.

Note: The amount of Killark sealing compound and packing fiber required for any seal is determined by volume hub size and mounting position of the seal. Refer to installation data table on page F49 for specific amounts required.

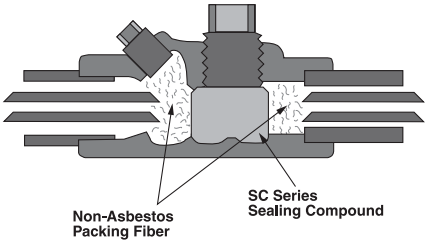

Schematic drawings illustrate the application of sealing compound, fiber dams, and installed seal with drain.

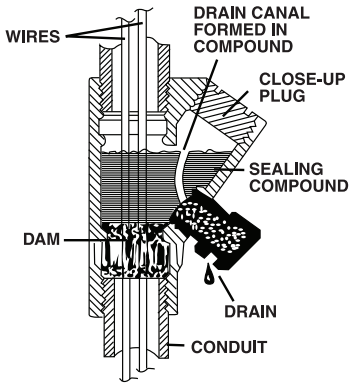

Splices and taps shall not be made in fittings intended only for sealing with compound, nor shall other fittings in which splices or taps are made be filled with compound.

Killark sealing fittings are produced with utmost care to insure a substantial margin of safety. Threads are clean, deep, and snug. When properly installed with Killark sealing compound (SC Type) and Killark non-asbestos fiber (PF Type) for the dams, you can be sure your installation will provide more than adequate safety.

HUBBELL®
KILLARK®

ENY-3

ENY-3 with Nipple

(For Vertical or Horizontal Conduit)

EYS-3

EYS-3-T with Nipple

(For Vertical or Horizontal Conduit)

ENY-1, 2, 3, 4, 5, 6
Class I, Div. 1 & 2, Groups A,B,C,D
Class I, Zone 1, Groups IIC, IIB, IIA
Class II, Div. 1 & 2, Groups E,F,G
Class III

EYS Series
Class I, Div. 1 & 2, Groups C,D
Class I, Zone 1, Groups IIB, IIA
Class II, Div. 1 & 2, Groups E,F,G
Class III

Listed File No. E10514
Certified File No. LR11716
See files for details or call Killark.

FEATURES-SPECIFICATIONS

Material/Finish

Copper-free Aluminum
(less than 4/10 of 1%)

- Electrostatically applied powder coating

Duraloy Iron

- Tri-Coat Finish of electrozinc, chromate sealant, and electrostatically applied powder coating

ENY SEALING FITTINGS						ENY WITH NIPPLE	
HUB SIZE	CATALOG NUMBER		DIMENSIONS		TURNING RADIUS	CATALOG NUMBER	
	KILLARK ALUMINUM	DURALOY IRON	A	B		KILLARK ALUMINUM	DURALOY IRON
1/2"	ENY-1	ENY-1M	3-15/16"(100)	1-13/16"(46)	1-3/16"(30)	ENY-1-T	ENY-1TM
3/4"	ENY-2	ENY-2M	4-1/16"(103)	2-1/16"(52)	1-9/32"(33)	ENY-2-T	ENY-2TM
1"	ENY-3	ENY-3M	4-25/32"(121)	2-11/32"(60)	1-13/32"(36)	ENY-3-T	ENY-3TM
1-1/4"	ENY-4	ENY-4M	5-3/8"(137)	3"(76)	1-25/32"(45)	ENY-4-T	ENY-4TM
1-1/2"	ENY-5	ENY-5M	5-11/16"(144)	3-1/4"(83)	1-29/32"(48)	ENY-5-T	ENY-5TM
2"	ENY-6	ENY-6M	6-3/8"(162)	3-15/16"(100)	2-5/16"(59)	ENY-6-T	ENY-6TM

Dimensions

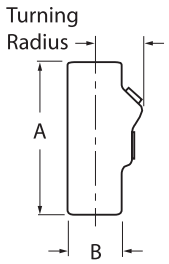

ENY Series

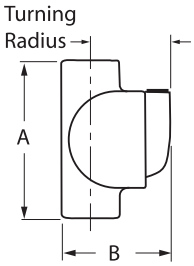

EYS Series

EYS SEALING FITTINGS						EYS WITH NIPPLE	
HUB SIZE	CATALOG NUMBER		DIMENSIONS		TURNING RADIUS	CATALOG NUMBER	
	KILLARK ALUMINUM	DURALOY IRON	A	B		KILLARK ALUMINUM	DURALOY IRON
1/2"	EYS-1	—	3-15/16"(100)	1-13/16"(46)	1-3/16"(30)	EYS-1-T	—
3/4"	EYS-2	—	4-1/16"(103)	2-1/16"(52)	1-9/32"(33)	EYS-2-T	—
1"	EYS-3	—	4-25/32"(121)	2-11/32"(60)	1-13/32"(36)	EYS-3-T	—
1-1/4"	EYS-4	—	5-3/8"(137)	3"(76)	1-25/32"(45)	EYS-4-T	—
1-1/2"	EYS-5	—	5-11/16"(144)	3-1/4"(83)	1-29/32"(48)	EYS-5-T	—
2"	EYS-6	—	6-3/8"(162)	3-15/16"(100)	2-5/16"(59)	EYS-6-T	—
2-1/2"	EYS-7	EYS-7M	7-5/8"(194)	4-1/2"(114)	4-1/8"(105)	EYS-7-T	EYS-7TM
3"	EYS-8	EYS-8M	7-5/8"(194)	4-1/2"(114)	4-3/8"(111)	EYS-8-T	EYS-8TM
3-1/2"	EYS-9	EYS-9M	7-1/8"(181)	5-3/16"(132)	4-3/4"(121)	EYS-9-T	EYS-9TM
4"	EYS-0	EYS-0M	7-1/8"(181)	5-3/16"(132)	4-3/4"(121)	EYS-0-T	EYS-0TM

EY-3 EY-3-T with Nipple
(For Vertical Conduit)

EYD-3 EYD-3-T with Nipple
(Drain/Seal for vertical conduit)

EY & EYD Series
Class I, Div. 1 & 2, Groups C,D
Class I, Zone 1, Groups IIB, IIA
Class II, Div. 1 & 2, Groups E,F,G
Class III

Listed File No. E10514
Certified File No. LR11716
See files for details or call Killark.

FEATURES-SPECIFICATIONS

Material/Finish

Copper-free Aluminum
(less than 4/10 of 1%)

- Electrostatically applied powder coating

Duraloy Iron

- Tri-Coat Finish of electrozinc, chromate sealant, and electro-statically applied powder coating

Dimensions

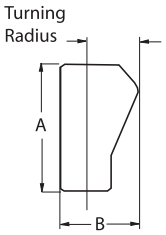

EY Series

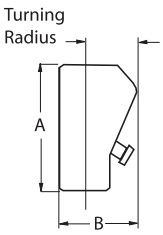

EYD Series

EY SEALING FITTINGS						EY WITH NIPPLE	
HUB SIZE	CATALOG NUMBER		DIMENSIONS		TURNING RADIUS	CATALOG NUMBER	
	KILLARK ALUMINUM	DURALOY IRON	A	B		KILLARK ALUMINUM	DURALOY IRON
1/2"	EY-1	EY-1M	3-1/16"(78)	2-3/4"(70)	2-1/4"(57)	EY-1-T	EY-1TM
3/4"	EY-2	EY-2M	3-1/16"(78)	2-3/4"(70)	2-1/4"(57)	EY-2-T	EY-2TM
1"	EY-3	EY-3M	4-9/32"(109)	3-1/8"(79)	2-3/8"(60)	EY-3-T	EY-3TM
1-1/4"	EY-4	EY-4M	5-1/8"(130)	3-7/8"(98)	2-7/8"(73)	EY-4-T	EY-4TM
1-1/2"	EY-5	EY-5M	5-1/8"(130)	4-5/8"(117)	3-7/16"(87)	EY-5-T	EY-5TM
2"	EY-6	EY-6M	5-1/8"(230)	5-11/16"(144)	4-1/4"(108)	EY-6-T	EY-6TM
2-1/2"	EY-7	EY-7M	7"(178)	6-5/16"(160)	4-5/8"(117)	EY-7-T	EY-7TM
3"	EY-8	EY-8M	7"(178)	6-5/16"(160)	4-5/8"(117)	EY-8-T	EY-8TM
3-1/2"	EY-9	EY-9M	8-3/4"(222)	7-1/8"(181)	5-3/8"(138)	EY-9-T	EY-9TM
4"	EY-0	EY-0M	8-3/4"(222)	7-1/8"(181)	5-3/8"(138)	EY-0-T	EY-0TM

EYD SEALING FITTINGS						EYD WITH NIPPLE	
HUB SIZE	CATALOG NUMBER		DIMENSIONS		TURNING RADIUS	CATALOG NUMBER	
	KILLARK ALUMINUM	DURALOY IRON	A	B		KILLARK ALUMINUM	DURALOY IRON
1/2"	EYD-1	EYD-1M	4-9/32"(109)	3-1/8"(79)	2-1/4"(57)	EYD-1-T	EYD-1TM
3/4"	EYD-2	EYD-2M	4-9/32"(109)	3-1/8"(79)	2-1/4"(57)	EYD-2-T	EYD-2TM
1"	EYD-3	EYD-3M	4-9/32"(109)	3-1/8"(79)	2-1/4"(57)	EYD-3-T	EYD-3TM
1-1/4"	EYD-4	EYD-4M	5-1/8"(130)	3-7/8"(98)	2-7/8"(73)	EYD-4-T	EYD-4TM
1-1/2"	EYD-5	EYD-5M	5-1/8"(130)	4-5/8"(117)	3-7/16"(87)	EYD-5-T	EYD-5TM
2"	EYD-6	EYD-6M	5-1/8"(130)	5-11/16"(144)	4-1/4"(108)	EYD-6-T	EYD-6TM
2-1/2"	EYD-7	EYD-7M	7"(178)	6-5/16"(160)	4-5/8"(117)	EYD-7-T	EYD-7TM
3"	EYD-8	EYD-8M	7"(178)	6-5/16"(160)	4-5/8"(117)	EYD-8-T	EYD-8TM
3-1/2"	EYD-9	EYD-9M	8-3/4"(122)	7-1/8"(181)	5-3/8"(137)	EYD-9-T	EYD-9TM
4"	EYD-0	EYD-0M	8-3/4"(122)	7-1/8"(181)	5-3/8"(137)	EYD-0-T	EYD-0TM

ENY

EYD

ENY40-1, 2, 3, 4, 5
Class I, Div. 1 & 2, Groups B, C, D
Class I, Zone 1, Groups IIB+H_2, IIA
Class II, Div. 1 & 2, Groups E, F, G
Class III

ENY40-6, 7, 8, 9, 0
EYD40(1 through 0) -6, 7, 8, 9, 0
Class I, Div. 1 & 2, Groups C, D
Class I, Zone 1, Groups IIB, IIA
Class II, Div. 1 & 2, Groups E, F, G
Class III

FEATURES-SPECIFICATIONS

Application
To seal Rigid Conduit or IMC Raceways with up to 40% wire fill.

Features
- A 40% wire fill capacity
- Large openings with threaded closures to provide easy access to conduit hubs for making dams
- Integral bushing in conduit hubs to protect conductor insulation from damage
- NPT threaded hubs to ensure ground continuity
- Minimum turning radius

Material/Finish
Copper-free Aluminum (less than 4/10 of 1%)
- Electrostatically applied powder coating

Duraloy Iron
- Tri-Coat Finish of electrozinc, chromate sealant, and electrostatically applied powder coating

ENY40 40% VERTICAL AND/OR HORIZONTAL CONDUIT SEALING FITTINGS

HUB SIZE	CATALOG NUMBER		DIMENSIONS		TURNING RADIUS*	REQUIRED SEALING COMPOUND & PACKING FIBER OZ.	PER HUB (PF)
	KILLARK ALUMINUM	DURALOY IRON	A	B			
1/2"	ENY40-1	ENY40-1M	4-1/16"(103)	2-1/16"(52)	1-9/32"(33)	2	0.06
3/4"	ENY40-2	ENY40-2M	4-25/32"(121)	2-11/32"(60)	1-13/32"(36)	4	0.12
1"	ENY40-3	ENY40-3M	5-3/8"(137)	3"(76)	1-25/32"(45)	7	0.26
1-1/4"	ENY40-4	ENY40-4M	5-11/16"(144)	3-1/4"(83)	1-29/32"(48)	13	1.00
1-1/2"	ENY40-5	ENY40-5M	6-3/8"(162)	3-15/16"(100)	2-5/16"(59)	22	2.00
2"	ENY40-6	ENY40-6M	7-5/8"(194)	4-1/2"(114)	4-1/8"(105)	36	3.00
2-1/2"	ENY40-7	ENY40-7M	7-5/8"(194)	4-1/2"(114)	4-3/8"(111)	61	3.56
3"	ENY40-8	ENY40-8M	7-1/8"(181)	5-3/16"(132)	4-3/4"(121)	89	6.00
3-1/2"	ENY40-9	ENY40-9M	7-1/8"(181)	5-3/16"(132)	4-3/4"(121)	114	7.00
4"	ENY40-0	ENY40-0M	11-1/16"(281)	6-1/2"(165)	4-1/4"(108)	202	9.60

EYD40 40% VERTICAL CONDUIT DRAIN SEALING FITTINGS

HUB SIZE	CATALOG NUMBER		DIMENSIONS		TURNING RADIUS*	REQUIRED SEALING COMPOUND & PACKING FIBER OZ.	PER HUB (PF)
	KILLARK ALUMINUM	DURALOY IRON	A	B			
1/2"	EYD40-1	EYD40-1M	4-9/32"(109)	3-1/8"(79)	2-1/4"(57)	4	0.03
3/4"	EYD40-2	EYD40-2M	4-9/32"(109)	3-1/8"(79)	2-1/4"(57)	6	0.06
1"	EYD40-3	EYD40-3M	5-1/8"(130)	3-7/8"(98)	2-7/8"(73)	7	0.13
1-1/4"	EYD40-4	EYD40-4M	5-1/8"(130)	4-5/8"(117)	3-7/16"(87)	13	0.50
1-1/2"	EYD40-5	EYD40-5M	5-1/8"(130)	5-11/16"(144)	4-1/4"(108)	22	1.00
2"	EYD40-6	EYD40-6M	7"(178)	6-5/16"(160)	4-5/8"(117)	36	1.50
2-1/2"	EYD40-7	EYD40-7M	7"(178)	6-5/16"(160)	4-5/8"(117)	61	1.75
3"	EYD40-8	EYD40-8M	8-3/4"(122)	7-1/8"(181)	5-3/8"(137)	89	3.00
3-1/2"	EYD40-9	EYD40-9M	8-3/4"(122)	7-1/8"(181)	5-3/8"(137)	114	3.50
4"	EYD40-0	EYD40-0M	11-1/16"(281)	6-1/2"(165)	4-1/4"(108)	202	4.50

** Turning radius with cover plug removed.*

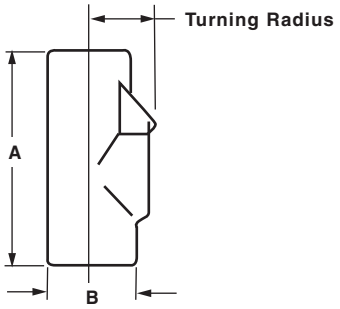

ENY40

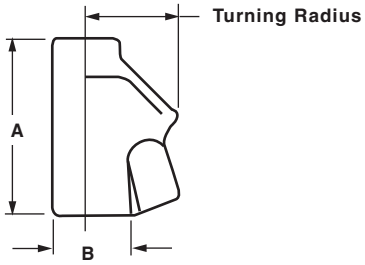

EYD40

Sealing Compound

Packing Fiber

Thread Lubricants

FEATURES-SPECIFICATIONS

Series SC/PF/LUBG Sealing Materials

Sealing Compound
SC Series Sealing compound is a cement used extensively for sealing conduit to prevent the spread of explosive gases. It is non-shrinking and a secure seal is formed. SC Series resists acids, water, oil, etc. It is UL Listed for use with Killark ENY, EY, and EYS Series. Also CSA certified for use with any CSA certified sealing fitting.

Packing Fiber
Killark's Packing Fiber is made from an environmentally safe, non-asbestos material. It is easy to use and forms a positive dam to hold compound (Killark SC Type) in ENY, EY, and EYS Series fittings.

Thread Lubricants
Two special blends of lubricants have been developed by Killark for use with threaded joints. These lubricants are to be used to prevent galling of pipe threads when threaded into a coupling, junction box, etc. They insure a quick release of undamaged male and female threads when parts are disassembled.

LUBG is a general purpose lubricant to be used in temperatures ranging from 0° to 125°F.

LUBT is a high-quality lubricant to be used in temperatures ranging from -40° to +500°F. It is recommended to be used on hazardous location lighting fixtures.

OUNCES REQUIRED PER FITTING

SEALING COMPOUND				PACKING FIBER
HUB SIZE	ENY①	EYS①	EY/EYD	
1/2"	1.5 oz.	3.0 oz.	1.0 oz.	1/16 oz.
3/4"	2.0 oz.	3.0 oz.	2.0 oz.	1/8 oz.
1"	3.0 oz.	8.0 oz.	4.5 oz.	1/4 oz.
1-1/4"	6.5 oz.	8.5 oz.	7.5 oz.	1/2 oz.
1 1/2"	8.5 oz.	17.5 oz.	12.0 oz.	1 oz.
2"	15.0 oz.	27.0 oz.	24.0 oz.	2 oz.
2-1/2"	—	42.0 oz.	44.0 oz.	3 oz.
3"	—	47.0 oz.	44.0 oz.	4 oz.
3-1/2"	—	56.0 oz.	75.0 oz.	6 oz.
4"	—	56.0 oz.	75.0 oz.	9 oz.

①*ENY/EYS suitable for both horizontal or vertical applications.*

SEALING COMPOUND

CATALOG NUMBER	SIZE PACKAGE
SC-4 OZ	4 oz.
SC-8 OZ	8 oz.
SC-1 LB	1 lb.
SC-5 LB	5 lbs.

PACKING FIBER

CATALOG NUMBER	SIZE PACKAGE
PF-2	2 oz.
PF-4	4 oz.
PF-16	1 lb.

THREAD LUBRICANTS

CATALOG NUMBER	CONTAINER PACKAGE
LUBT-2	2 oz.
LUBG-6	6 oz.